Z011-120-0637-B

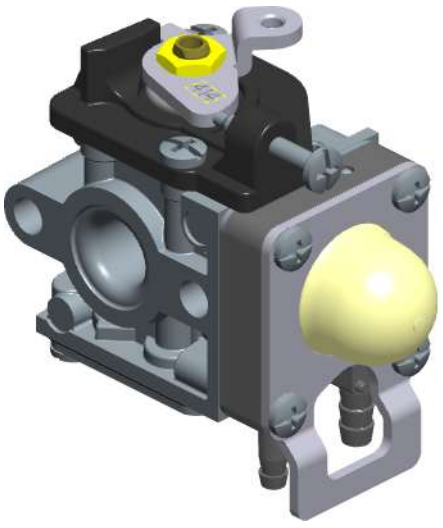

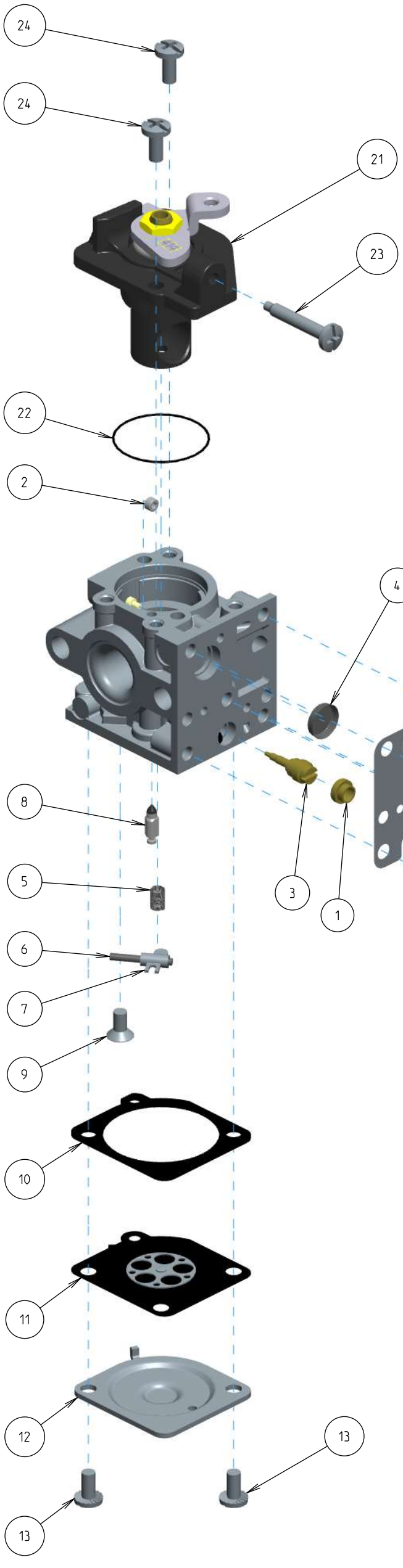

ITEM	ZAMA PART NR.	DESCRIPTION
	Z011-120-0637-B	Carburetor RE
	Z011 078 A013	ROTOR COVER ASSY & PLUG (21,25)
	Z000 001 K016	REBUILD KIT (2,4,5,6,7,8,10,11,14,15)
	Z000 003 K009	GASKET & DIAPHRAGM KIT (10,11,14,15)
1	Z000 009 Z012	Retainer
2	Z000 082 Z000	Roller
3	Z03000345	SCREW, MAIN MIXTURE
4	0004033	STRAINER
5	Z000 019 Z008	Metering spring
6	Z000 021 Z006	Pin
7	Z000 020 Z002	Metering lever
8	Z000 018 Z001	Inlet needle
9	14903006	SCREW
10	0016076	GASKET,METERING
11	Z000 015 A004	Metering diaphragm assy
12	Z000 028 Z001	Metering cover
13	Z000 720 Z001	Binding screw vs serration
14	0015086	DIAPHRAGM,PUMP
15	0016079	GASKET,PUMP
16	Z000 056 A006	Base primer assy
17	16103012	SCREW
18	0057034	SYRINGE
19	0009063	RETAINER, SYRINGE
20	Z000 720 Z003	Binding screw vs serration
21	Z011 078 A016	Rotor cover assy
22	Z000 955 Z003	2nd class O-ring
23	0035067	SCREW, THROTTLE ADJUST
24	Z000 710 Z000	Binding head screw
25	0005044	PLUG FOR ADJUST SCREW